Connor 1-Phase Track light

Family code 03C4T0111 · collection Connor · Absinthe Lights

The Connor 1-Phase Track light is an adjustable Ø60 mm GU10 spot with a fixed adapter for a 1-phase track, 128 mm below the track. 230V, IP20; track and lamp not supplied.

PRODUCT

DIMENSIONAL DRAWING

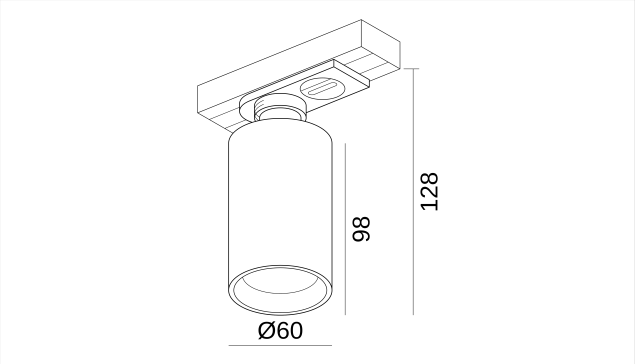

Dimensions in mm. Not to be used as an installation drawing.

FEATURES

- On a 1-phase track, 128 mm below the track
- GU10 socket for a 50 mm LED lamp (PAR16)

ITEM NUMBERS AND EAN

ITEM NUMBER	VERSION	EAN
03C4T0111B0	Black	**5407004009773**
03C4T0111W0	White	**5407004009766**

LIGHT SOURCE

Socket	**GU10**
Lamp type	**PAR16**
Maximum load	**7.5W per lampholder**
Number of light points	**1**
Light source included	**No**
Dimmable	**Lightsource dependent**

ELECTRICAL

Mains voltage	**230V**
IP rating	**IP20**
Protection class	**Class I (earthed)**

INSTALLATION

Mounting location	**Track**
Mounting type	**Track**
Use	**Interior**
Adjustability	**Adjustable**

DIMENSIONS

Height	**128 mm**
Diameter	**Ø60 mm**

MATERIAL

Material	**Aluminium**
Finish	**Powder coated**

IN THE BOX

Included	**Fixture, Lamp holder, Manual**
Not included	**Light source**

LOGISTICS AND STANDARDS

Warranty	**5 years**
HS code	**9405 11 90**
Country of origin	**China**

Installation. Class I: the luminaire must be earthed. The electrical installation should be carried out by qualified personnel only, according to the regulations for electrical and mechanical safety in your country. Always switch off electricity supply before installation and maintenance.