Tuup Slim Asym 2 Surface-mounted spotlight

Family code 05C3A0211 · collection Tuup · Absinthe Lights

The Tuup Slim Asym 2 is a surface spotlight with two GU10 spots on a 220 × 42 mm bar, the spots to one side. Each spot turns and tilts on its own. At 18 mm the bar is flatter than that of the straight Tuup Slim. Height 148 mm. 230V, IP20, Class I. Lamps not supplied.

PRODUCT

DIMENSIONAL DRAWING

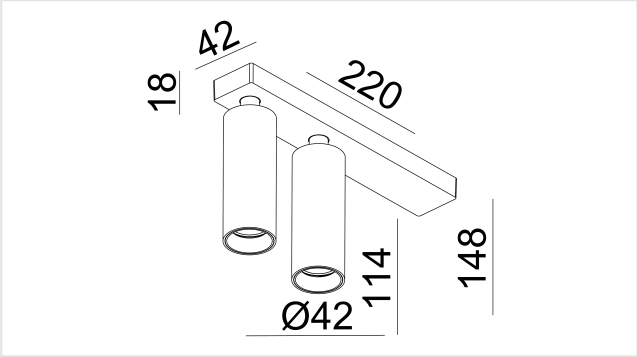

Dimensions in mm. Not to be used as an installation drawing.

FEATURES

- Surface mounted on the ceiling, bar 220 × 42 × 18 mm
- Tubes Ø42 × 114 mm, come off without tools

ITEM NUMBERS AND EAN

ITEM NUMBER	VERSION	EAN
05C3A0211B0	Black	**5407004000688**
05C3A0211W0	White	**5407004000671**

LIGHT SOURCE

Socket	**2× GU10**
Lamp type	**MR11**
Number of light points	**2**
Light source included	**No**
Dimmable	**Lightsource dependent**

ELECTRICAL

Mains voltage	**230V**
IP rating	**IP20**
Protection class	**Class I (earthed)**

INSTALLATION

Mounting location	**Ceiling**
Mounting type	**Surface**
Use	**Interior**
Adjustability	**Adjustable**

DIMENSIONS

Length	**220 mm**
Width	**42 mm**
Height	**148 mm**
Diameter	**Ø42 mm**
Mounting plate	**L 220 × W 42 × D 18 mm**

MATERIAL

Material	**Aluminium**
Finish	**Powder coated**

IN THE BOX

Included	**Fixture, Lamp holder, Mounting hardware, Manual**
Not included	**Light source**

LOGISTICS AND STANDARDS

Warranty	**5 years**
HS code	**9405 11 90**
Country of origin	**China**

Installation. Class I: the luminaire must be earthed. The electrical installation should be carried out by qualified personnel only, according to the regulations for electrical and mechanical safety in your country. Always switch off electricity supply before installation and maintenance.