A-Track 3-Phase 90° Corner Connector

Family code T03A4LCX10 · collection A-Track · Absinthe Lights

The A-Track 3-Phase 90° Corner Connector joins two A-Track 3-phase tracks at a right angle and takes the three circuits and the earth through. Earth inside or outside follows the earth conductor.

PRODUCT



DIMENSIONAL DRAWING

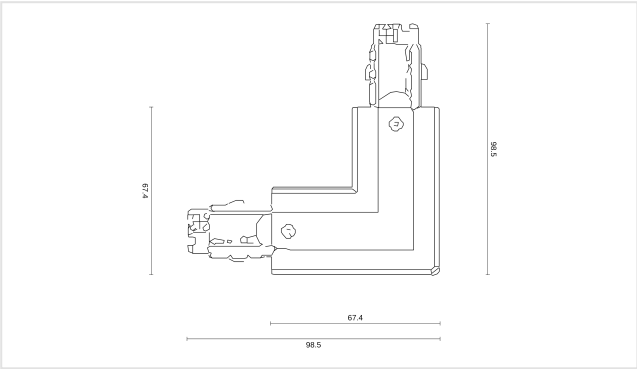

Dimensions in mm. Not to be used as an installation drawing.

FEATURES

- Two tracks at a right angle
- For the A-Track 3-phase track

ITEM NUMBERS AND EAN

ITEM NUMBER	VERSION	EAN
T03A4LCI10B	Earth inside, black	**5407004000244**
T03A4LCO10B	Earth outside, black	**5407004000251**
T03A4LCI10W	Earth inside, white	**5407004000220**
T03A4LCO10W	Earth outside, white	**5407004000237**

ELECTRICAL

Mains voltage	**230V**
IP rating	**IP20**
Protection class	**Class I (earthed)**

INSTALLATION

Mounting location	**Track**
Use	**Interior**

DIMENSIONS

Length	**98.5 mm**
Width	**98.5 mm**
Height	**32.5 mm**

MATERIAL

Material	**Plastic**

IN THE BOX

Included	**Connector**

LOGISTICS AND STANDARDS

Warranty	**5 years**
HS code	**8536 90 01**
Country of origin	**China**

Installation. Class I: the luminaire must be earthed. The electrical installation should be carried out by qualified personnel only, according to the regulations for electrical and mechanical safety in your country. Always switch off electricity supply before installation and maintenance.