Clickfit Deep Medium IP54 Surface mounted downlight

Family code 02C3MD021 · collection Clickfit · Absinthe Lights

The Clickfit Deep Medium IP54 Surface mounted downlight is the Clickfit Deep Medium IP54 recessed spotlight in a Ø80 × 120 mm aluminium surface mount housing, with a glass in front of the lamp: suitable up to bathroom zone 2 and for sheltered outdoor areas. Class II; 50 mm GU10 LED lamp or LED module, not supplied.

PRODUCT



DIMENSIONAL DRAWING

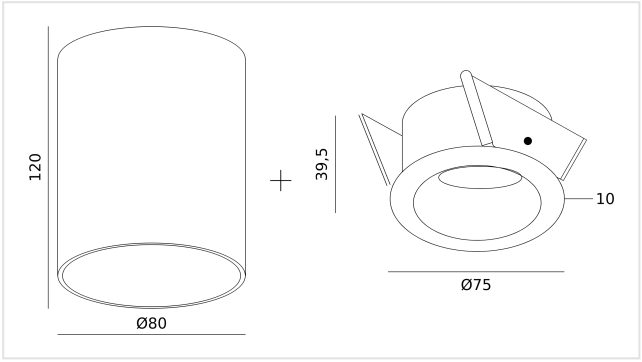

Dimensions in mm. Not to be used as an installation drawing.

FEATURES

- Surface mounted, Ø80 × 120 mm
- IP54, up to bathroom zone 2

ITEM NUMBERS AND EAN

ITEM NUMBER	VERSION
02C3MD021BB0	Black
02C3MD021BW0	Black/White
02C3MD021WB0	White/Black
02C3MD021WW0	White

LIGHT SOURCE

Socket	**GU10**
Lamp type	**PAR16**
Number of light points	**1**
Light source included	**No**
Dimmable	**Lightsource dependent**

ELECTRICAL

Mains voltage	**230V**
IP rating	**IP54**
Protection class	**Class II (double insulated)**

INSTALLATION

Mounting location	**Ceiling**
Mounting type	**Surface**
Use	**Interior · Exterior**
Adjustability	**Fixed**

DIMENSIONS

Height	**120 mm**
Diameter	**Ø80 mm**

MATERIAL

Material	**Aluminium**
Finish	**Powder coated**

IN THE BOX

Included	**Fixture, Lamp holder, Mounting plate, Manual**
Not included	**Light source**

LOGISTICS AND STANDARDS

Warranty	**5 years**
HS code	**9405 11 90**
Country of origin	**China**

Installation. The electrical installation should be carried out by qualified personnel only, according to the regulations for electrical and mechanical safety in your country. Always switch off electricity supply before installation and maintenance.