Chuck 2 Surface mounted downlight

Family code 07C300211 · collection Chuck · Absinthe Lights

The Chuck 2 is a fixed surface-mounted downlight of 160 × 80 × 90 mm with two GU10 sockets, for dry indoor areas and supplied without lamps.

PRODUCT

DIMENSIONAL DRAWING

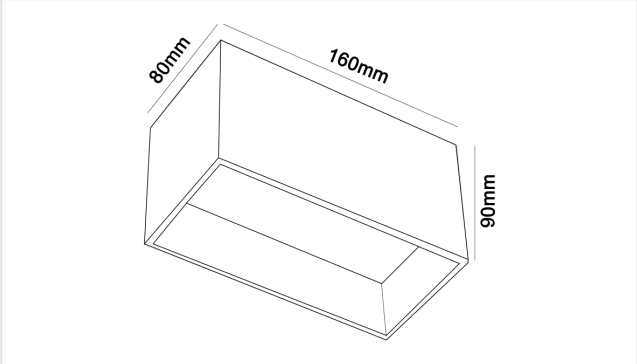

Dimensions in mm. Not to be used as an installation drawing.

FEATURES

- Surface mounted on the ceiling, footprint 160 × 80 mm
- Two GU10 sockets for 50 mm LED lamps (PAR16)

ITEM NUMBERS AND EAN

ITEM NUMBER	VERSION	EAN
07C300211B0	Black	**5407004007816**
07C300211W0	White	**5407004007809**

LIGHT SOURCE

Socket	**2× GU10**
Lamp type	**PAR16**
Maximum load	**35W per lampholder**
Number of light points	**2**
Light source included	**No**
Dimmable	**Lightsource dependent**

ELECTRICAL

Mains voltage	**230V**
IP rating	**IP20**
Protection class	**Class I (earthed)**

INSTALLATION

Mounting location	**Ceiling**
Mounting type	**Surface**
Use	**Interior**
Adjustability	**Fixed**

DIMENSIONS

Length	**160 mm**
Width	**80 mm**
Height	**90 mm**
Mounting plate	**L 160 × W 80 mm**

MATERIAL

Material	**Aluminium**
Finish	**Powder coated**

IN THE BOX

Included	**Fixture, Lamp holder, Mounting hardware, Manual**
Not included	**Light source**

LOGISTICS AND STANDARDS

Warranty	**5 years**
HS code	**9405 11 90**
Country of origin	**China**

Installation. Class I: the luminaire must be earthed. The electrical installation should be carried out by qualified personnel only, according to the regulations for electrical and mechanical safety in your country. Always switch off electricity supply before installation and maintenance.