A-Track 3-Phase Adjustable Connector

Family code T03A4AC010 · collection A-Track · Absinthe Lights

The A-Track 3-Phase Adjustable Connector joins two A-Track 3-phase tracks at an angle set on site. The hinge in the middle turns, while the three circuits and the earth continue through.

PRODUCT



DIMENSIONAL DRAWING

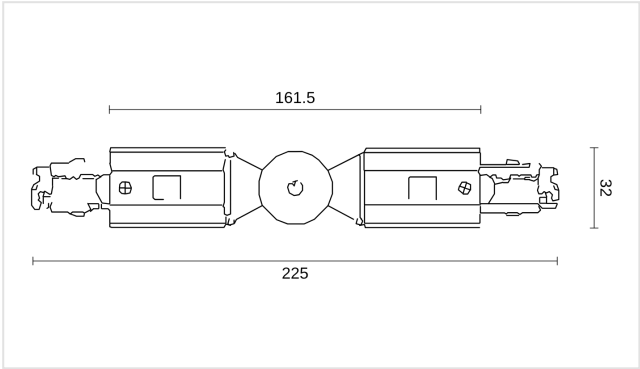

Dimensions in mm. Not to be used as an installation drawing.

FEATURES

- Angle of your choice
- For the A-Track 3-phase track

ITEM NUMBERS AND EAN

ITEM NUMBER	VERSION	EAN
T03A4AC010B	Black	**5407004000213**
T03A4AC010W	White	**5407004000206**

ELECTRICAL

Mains voltage	**230V**
IP rating	**IP20**
Protection class	**Class I (earthed)**

INSTALLATION

Mounting location	**Track**
Use	**Interior**

DIMENSIONS

Length	**225 mm**
Width	**32 mm**
Height	**32.5 mm**

MATERIAL

Material	**Plastic**

IN THE BOX

Included	**Connector**

LOGISTICS AND STANDARDS

Warranty	**5 years**
HS code	**8536 90 01**
Country of origin	**China**

Installation. Class I: the luminaire must be earthed. The electrical installation should be carried out by qualified personnel only, according to the regulations for electrical and mechanical safety in your country. Always switch off electricity supply before installation and maintenance.