A-Track 1-Phase End Cap

Family code T01A4EC010 · collection A-Track · Absinthe Lights

The A-Track 1-Phase End Cap closes the open end of an A-Track 1-phase track; the manual requires one on every track end without a feed-in or connector.

PRODUCT



DIMENSIONAL DRAWING

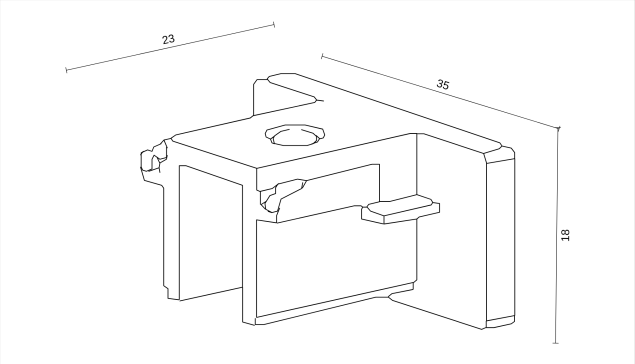

Dimensions in mm. Not to be used as an installation drawing.

FEATURES

- Closes the track end
- For the A-Track 1-phase track

ITEM NUMBERS AND EAN

ITEM NUMBER	VERSION	EAN
T01A4EC010B	Black	**5407004009575**
T01A4EC010W	White	**5407004009568**

ELECTRICAL

IP rating	**IP20**

MATERIAL

Material	**Plastic**

INSTALLATION

Mounting location	**Track**
Use	**Interior**

IN THE BOX

Included	**End cap**

DIMENSIONS

Length	**23 mm**
Width	**35 mm**
Height	**18 mm**

LOGISTICS AND STANDARDS

Warranty	**5 years**
HS code	**8536 90 01**
Country of origin	**China**

Installation. The electrical installation should be carried out by qualified personnel only, according to the regulations for electrical and mechanical safety in your country. Always switch off electricity supply before installation and maintenance.