# A-Track 3-Phase End Cap

Family code T03A4EC010 · collection A-Track · Absinthe Lights

The A-Track 3-Phase End Cap closes the open end of an A-Track 3-phase track; the manual requires one on every track end without a feed-in or connector.

## PRODUCT



## DIMENSIONAL DRAWING

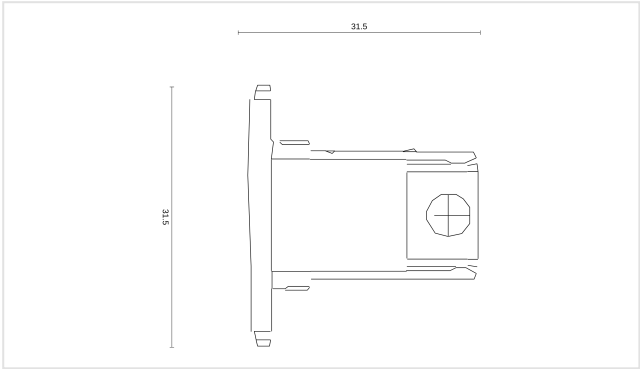


Dimensions in mm. Not to be used as an installation drawing.

## FEATURES

- Closes the track end
- For the A-Track 3-phase track

## ITEM NUMBERS AND EAN

| ITEM NUMBER | VERSION | EAN |
|---|---|---|
| **T03A4EC010B** | Black | **5407004000152** |
| **T03A4EC010W** | White | **5407004000145** |

## ELECTRICAL

| | |
|---|---|
| IP rating | **IP20** |

## MATERIAL

| | |
|---|---|
| Material | **Plastic** |

## INSTALLATION

| | |
|---|---|
| Mounting location | **Track** |
| Use | **Interior** |

## IN THE BOX

| | |
|---|---|
| Included | **End cap** |

## DIMENSIONS

| | |
|---|---|
| Length | **31.5 mm** |
| Width | **31.5 mm** |
| Height | **32.5 mm** |

## LOGISTICS AND STANDARDS

| | |
|---|---|
| Warranty | **5 years** |
| HS code | **8536 90 01** |
| Country of origin | **China** |

**Installation.** The electrical installation should be carried out by qualified personnel only, according to the regulations for electrical and mechanical safety in your country. Always switch off electricity supply before installation and maintenance.