Sleekfit Tuup Recessed light

Item number 26C2TUU11W2 · collection Sleekfit · Absinthe Lights

The Sleekfit Tuup is a Ø69.5 mm LED recessed light with a pull-out tube that tilts 90° and rotates 355°: 880 lm at 15W, 350 mA. Ø92 mm cut-out, in a Sleekfit mounting kit.

PRODUCT



DIMENSIONAL DRAWING

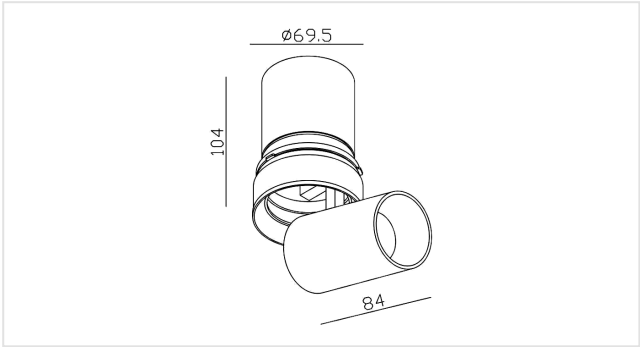

Dimensions in mm. Not to be used as an installation drawing.

FEATURES

- Pull-out tube, tilts 90°, rotates 355°
- 880 lm, 2700K, CRI 93, 350 mA
- In a Sleekfit mounting kit, Ø92 mm cut-out

ITEM NUMBERS AND EAN

ITEM NUMBER	VERSION	EAN
26C2TUU11W2	White	**5407004000381**

LIGHT SOURCE

Light source	**Integrated LED**
Number of light points	**1**
Light source included	**Yes**
Luminous flux	**880 lm**
Power	**15W**
Efficacy	**58.67 lm/W**
Colour temperature	**2700K**
Colour rendering (CRI)	**93**
Beam angle	**24°**
Dimmable	**Yes**

ELECTRICAL

Driver included	**No**
IP rating	**IP20**
Protection class	**Class II (double insulated)**

INSTALLATION

Mounting location	**Ceiling**
Mounting type	**Recessed**
Use	**Interior**
Adjustability	**Adjustable**
Ceiling type	**Solid (concrete) · Hollow (plasterboard)**
Cut-out	**Ø92 mm**
Recessed depth	**104 mm**

DIMENSIONS

Length	**84 mm**
Height	**104 mm**
Diameter	**Ø69.5 mm**

IN THE BOX

Included	**Fixture, Light source**
Not included	**LED driver, Recessed housing**

LOGISTICS AND STANDARDS

Warranty	**5 years**
HS code	**9405 42 39**
Country of origin	**China**

Installation. The electrical installation should be carried out by qualified personnel only, according to the regulations for electrical and mechanical safety in your country. Always switch off electricity supply before installation and maintenance.