A-Track 1-Phase 180° Straight Connector

Family code T01A4SC010 · collection A-Track · Absinthe Lights

The A-Track 1-Phase 180° Straight Connector joins two A-Track 1-phase tracks in line and continues the circuit and earth; it slides into both track ends and is screwed tight.

PRODUCT



DIMENSIONAL DRAWING

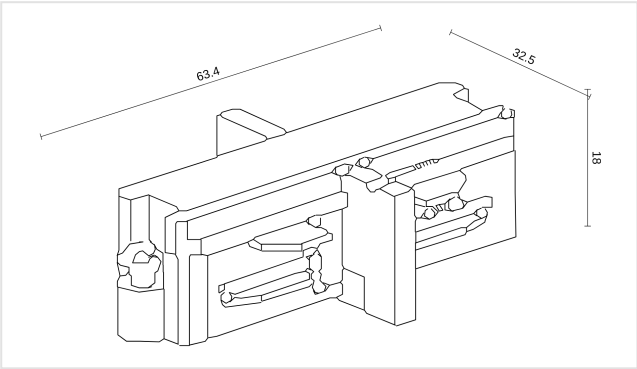

Dimensions in mm. Not to be used as an installation drawing.

FEATURES

- Two tracks in line
- For the A-Track 1-phase track

ITEM NUMBERS AND EAN

ITEM NUMBER	VERSION	EAN
T01A4SC010B	Black	**5407004009599**
T01A4SC010W	White	**5407004009582**

ELECTRICAL

Mains voltage	**230V**
IP rating	**IP20**
Protection class	**Class I (earthed)**

INSTALLATION

Mounting location	**Track**
Use	**Interior**

DIMENSIONS

Length	**63.4 mm**
Width	**32.5 mm**
Height	**18 mm**

MATERIAL

Material	**Plastic**

IN THE BOX

Included	**Connector**

LOGISTICS AND STANDARDS

Warranty	**5 years**
HS code	**8536 90 01**
Country of origin	**China**

Installation. Class I: the luminaire must be earthed. The electrical installation should be carried out by qualified personnel only, according to the regulations for electrical and mechanical safety in your country. Always switch off electricity supply before installation and maintenance.