Clickfit Rim Deep Recessed light

Family code 02C1RD011 · collection Clickfit · Absinthe Lights

The Clickfit Rim Deep is a recessed spotlight for a Ø80 mm cut-out, with a GU10 socket for an LED lamp or an LED module, not supplied. Rim Ø90 mm, Core Ø70 × 34.2 mm.

PRODUCT

DIMENSIONAL DRAWING

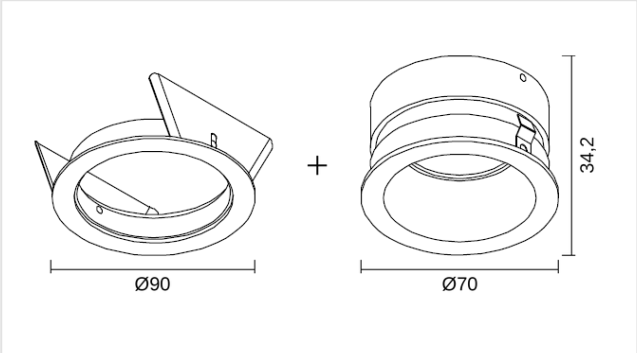

Dimensions in mm. Not to be used as an installation drawing.

FEATURES

- Ø80 mm cut-out, leaf springs
- GU10 socket, light source not supplied

ITEM NUMBERS AND EAN

ITEM NUMBER	VERSION
02C1RD011B0	Black
02C1RD011W0	White

LIGHT SOURCE

Socket	**GU10**
Lamp type	**PAR16**
Number of light points	**1**
Light source included	**No**
Dimmable	**Lightsource dependent**

ELECTRICAL

Mains voltage	**230V**
IP rating	**IP20**
Protection class	**Class II (double insulated)**

INSTALLATION

Mounting location	**Ceiling**
Mounting type	**Recessed**
Use	**Interior**
Adjustability	**Fixed**
Ceiling type	**Solid (concrete) · Hollow (plasterboard)**
Cut-out	**Ø80 mm**

DIMENSIONS

Height	**34.2 mm**
Diameter	**Ø90 mm**

MATERIAL

Material	**Aluminium**
Finish	**Powder coated**

IN THE BOX

Included	**Fixture, Lamp holder, Spring clips, Manual**
Not included	**Light source**

LOGISTICS AND STANDARDS

Warranty	**5 years**
HS code	**9405 11 90**
Country of origin	**China**

Installation. The electrical installation should be carried out by qualified personnel only, according to the regulations for electrical and mechanical safety in your country. Always switch off electricity supply before installation and maintenance.