Sleekfit Spot Recessed light

Item number 26C1SPO11W2 · collection Sleekfit · Absinthe Lights

The Sleekfit Spot is a fixed Ø69.5 × 67 mm LED recessed light: 1050 lm at 15W, 350 mA. It fits in a Sleekfit Rim or Trimless mounting kit, Ø92 mm cut-out.

PRODUCT



DIMENSIONAL DRAWING

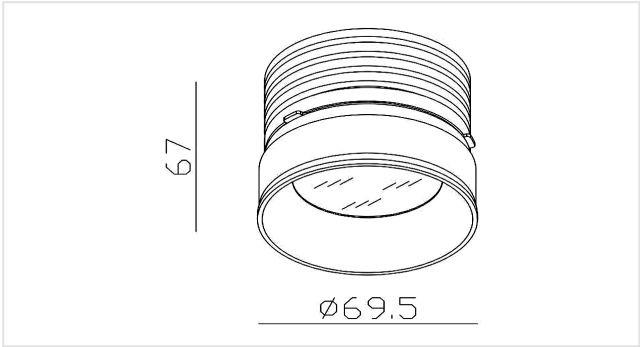

Dimensions in mm. Not to be used as an installation drawing.

FEATURES

- 1050 lm, 2700K, CRI 93, 36° beam
- 350 mA constant current, driver separate
- In a Sleekfit mounting kit, Ø92 mm cut-out

ITEM NUMBERS AND EAN

ITEM NUMBER	VERSION	EAN
26C1SPO11W2	White	**5407004000404**

LIGHT SOURCE

Light source	**Integrated LED**
Number of light points	**1**
Light source included	**Yes**
Luminous flux	**1050 lm**
Power	**15W**
Efficacy	**70 lm/W**
Colour temperature	**2700K**
Colour rendering (CRI)	**93**
Beam angle	**36°**
Dimmable	**Yes**

ELECTRICAL

Driver included	**No**
IP rating	**IP20**
Protection class	**Class II (double insulated)**

INSTALLATION

Mounting location	**Ceiling**
Mounting type	**Recessed**
Use	**Interior**
Adjustability	**Fixed**
Ceiling type	**Solid (concrete) · Hollow (plasterboard)**
Cut-out	**Ø92 mm**
Recessed depth	**67 mm**

DIMENSIONS

Height	**67 mm**
Diameter	**Ø69.5 mm**

IN THE BOX

Included	**Fixture, Light source**
Not included	**LED driver, Recessed housing**

LOGISTICS AND STANDARDS

Warranty	**5 years**
HS code	**9405 42 39**
Country of origin	**China**

Installation. The electrical installation should be carried out by qualified personnel only, according to the regulations for electrical and mechanical safety in your country. Always switch off electricity supply before installation and maintenance.