Clickfit Smooth Large Surface mounted downlight

Family code 02C3LS011 · collection Clickfit · Absinthe Lights

The Clickfit Smooth Large Surface mounted downlight is the Clickfit Smooth Large recessed spotlight in a Ø96 × 120 mm aluminium surface mount housing, for dry indoor spaces. 230V, IP20, Class II; 50 mm GU10 LED lamp or LED module, not supplied.

PRODUCT

DIMENSIONAL DRAWING

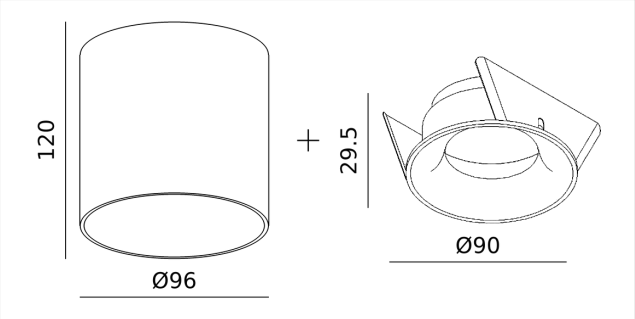

Dimensions in mm. Not to be used as an installation drawing.

FEATURES

- Surface mounted, Ø96 × 120 mm
- IP20, 230V, Class II

ITEM NUMBERS AND EAN

ITEM NUMBER	VERSION
02C3LS011BB0	Black
02C3LS011BBR0	Black/Bronze
02C3LS011BG0	Black/Gold
02C3LS011BW0	Black/White
02C3LS011WB0	White/Black
02C3LS011WBR0	White/Bronze
02C3LS011WG0	White/Gold
02C3LS011WW0	White

LIGHT SOURCE

Socket	**GU10**
Lamp type	**PAR16**
Number of light points	**1**
Light source included	**No**
Dimmable	**Lightsource dependent**

ELECTRICAL

Mains voltage	**230V**
IP rating	**IP20**
Protection class	**Class II (double insulated)**

INSTALLATION

Mounting location	**Ceiling**
Mounting type	**Surface**
Use	**Interior**
Adjustability	**Fixed**

DIMENSIONS

Height	**120 mm**
Diameter	**Ø96 mm**

MATERIAL

Material	**Aluminium**
Finish	**Powder coated**

IN THE BOX

Included	**Fixture, Lamp holder, Mounting plate, Manual**
Not included	**Light source**

LOGISTICS AND STANDARDS

Warranty	**5 years**
HS code	**9405 11 90**
Country of origin	**China**

Installation. The electrical installation should be carried out by qualified personnel only, according to the regulations for electrical and mechanical safety in your country. Always switch off electricity supply before installation and maintenance.